L F Schmidt

L. F. SCHMIDT LICENSE No. 43409 STATE OF FLORIDA PROFESSIONAL ENGINEER

Digitally signed by Lyndon F Schmidt
Date: 2023.07.26 12:14:13 -04'00'

This item has been digitally signed and sealed by **L. F. Schmidt, P.E.** on the date adjacent to the seal.

Printed copies of this document are not considered signed and sealed and the signature must be verified on any electronic copies.

THIS PRODUCT APPROVAL IS VALID ONLY FOR THE STATE OF FLORIDA

ODL, Inc.

Evolve Lite Frame System

DOORGLASS ASSEMBLY
FOR GLAZING UP TO A 3'0 x 8'0" SINGLE PANEL
"NON-IMPACT"

GENERAL NOTES

1. This product has been evaluated and is in compliance with the 8th Edition (2023) Florida Building Code (FBC) structural requirements excluding the High Velocity Hurricane Zone (HVHZ).
2. When used in areas requiring wind borne debris protection this product is required to be protected with an impact resistant covering that complies with FBC Sections 1609.1.2 & R301.2.1.2.
3. This product is approved for use as a substitute doorglass assembly in conjunction with a glazed steel or fiberglass side hinged swing door possessing a comparable current Florida Statewide product approval.
4. The design pressure (DP) rating shall be the lesser of the DP rating shown on Sheet 1 of this approval or the DP rating shown in the glazed steel or fiberglass side hinged swing door approval being used.
5. The door panel and lite opening size shall not exceed the sizes shown in this approval or the glazed steel or fiberglass side hinged swing door approval being used.
6. This product is approved for use in the door panels as specified on Sheets 3 & 4 of this approval. Substitution into a similar product may be approved for use by the local Authority Having Jurisdiction. In all cases, the glazed steel or fiberglass door used must possess a comparable current Florida Statewide product approval.

TABLE OF CONTENTS

SHEET #	DESCRIPTION
1	Typical elevations, design pressures and general notes
2	Frame & glazing details & bill of materials
3	Fiberglass door panels
4	Steel door panels

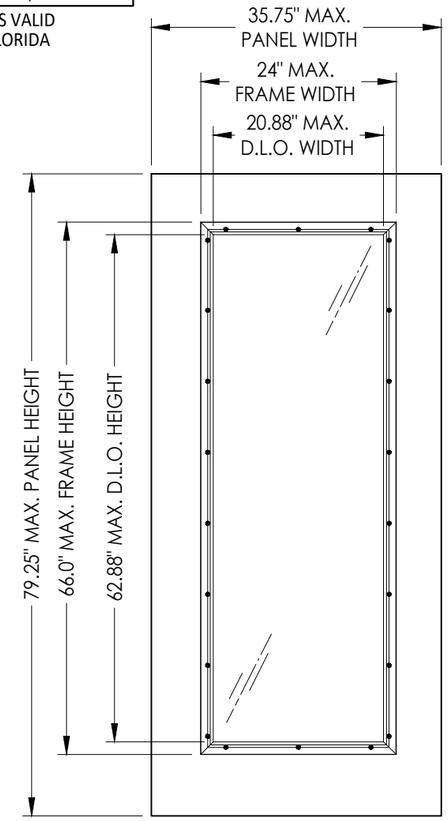

6'-8" DOOR/SIDELITE PANEL

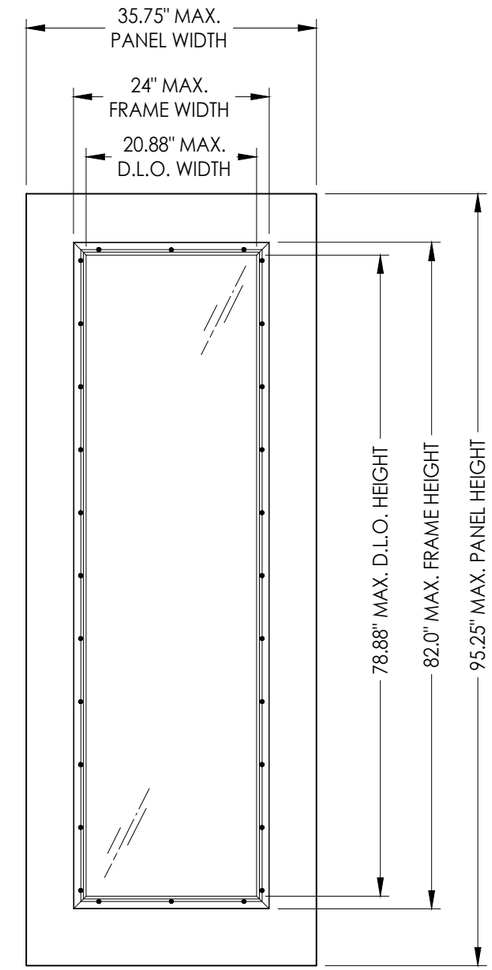

8'-0" DOOR/SIDELITE PANEL

MAX DESIGN PRESSURE RATINGS (PSF)*		
DOOR TYPE	POSITIVE	NEGATIVE
6'-8" STEEL	+60.0	-60.0
6'-8" FIBERGLASS	+65.0	-65.0
8'-0" STEEL	+60.0	-60.0
8'-0" FIBERGLASS	+65.0	-65.0

*SEE SHEETS 3 & 4 FOR DOOR PANEL DESIGN PRESSURE RATING LIMITATIONS

Documents Prepared By:
Lyndon F. Schmidt
P.E. No. 43409
RW BUILDING CONSULTANTS, INC.
P.O. Box 230, Valrico, FL 33595
Phone No.: 813.659.9197
FBPE Registry No. 9813

PRODUCT: *EVOLVE LITE FRAME SYSTEM*

PART OR ASSEMBLY: *TYPICAL ELEVATIONS, DESIGN PRESSURES & GENERAL NOTES*

REVISIONS

NO.	DATE		BY
6	7/01/23	UPDATE TO 8TH ED. (2023) FBC	LFS
5	8/05/20	UPDATE TO 7TH ED. (2020) FBC	DAC
4	4/04/19	UPDATE D.P. FOR NEW TESTING	LFS
3	10/03/18	ADD DOOR PANELS & GLAZING DET.	LFS
2	9/26/17	UPDATE TO 6TH ED. (2017) FBC	JK
1	3/28/15	UPDATE TO 5TH ED. (2014) FBC	JK

DATE: 4/15/13
SCALE: N.T.S.
DWG. BY: JK
CHK. BY: LFS
DRAWING NO.: FL-15260.8
SHEET 1 OF 4

© 2013 R.W. BUILDING CONSULTANTS INC.

Z:\2023 FBC Drawings\ODL, Inc\FL-15260 R11\FL-15260.8.dwg

BILL OF MATERIALS		
ITEM #	DESCRIPTION	MATERIAL
1	INTERIOR FRAME (EVOLVE)	HP-POLYPRO
2	EXTERIOR FRAME (EVOLVE)	HP-POLYPRO
3	#8 X 1-1/2" PPH SMS (HI-LO THREAD)	STEEL

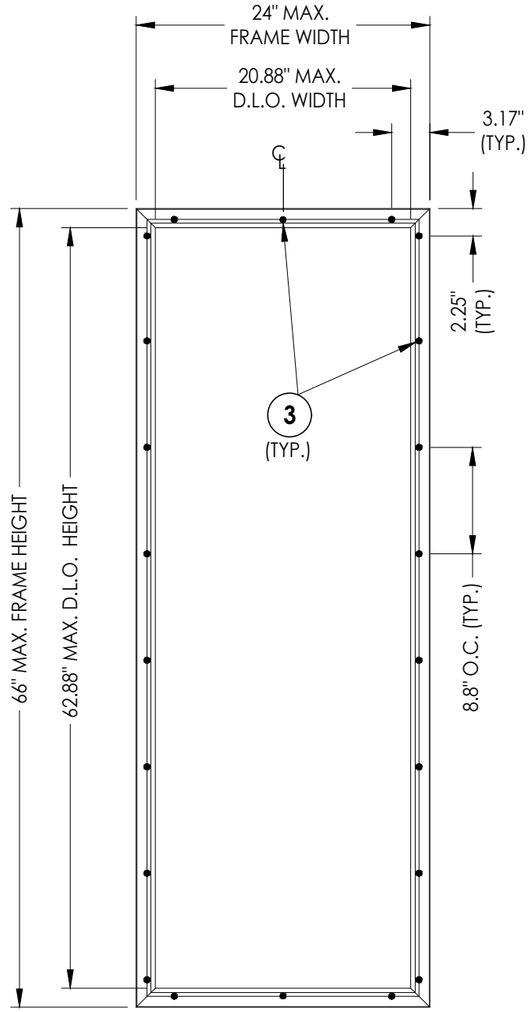

EVOLVE FRAME SYSTEM
HP Polypropylene
6'-8" DOOR

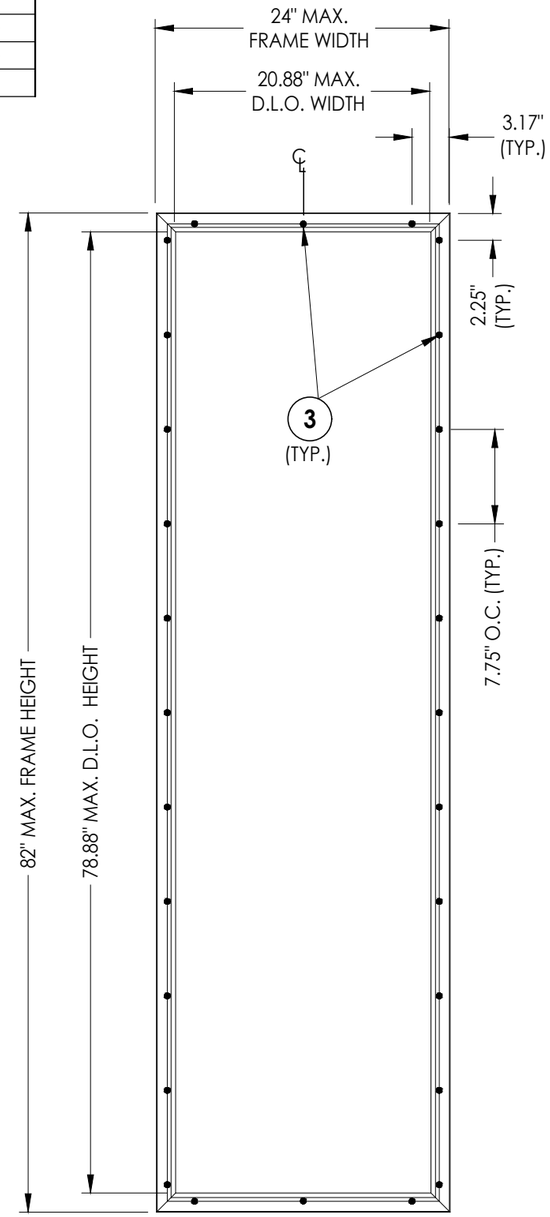

EVOLVE FRAME SYSTEM
HP Polypropylene
8'-0" DOOR

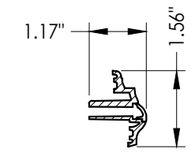

1 **INTERIOR FRAME**
Evolve Frame

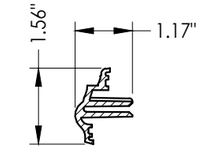

2 **EXTERIOR FRAME**
Evolve Frame

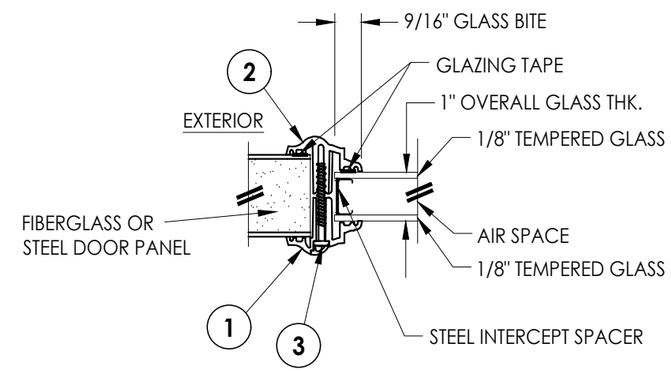

G1 **GLAZING DETAIL**
EVOLVE FRAME (1" INSULATED GLASS)
TAPE GLAZING

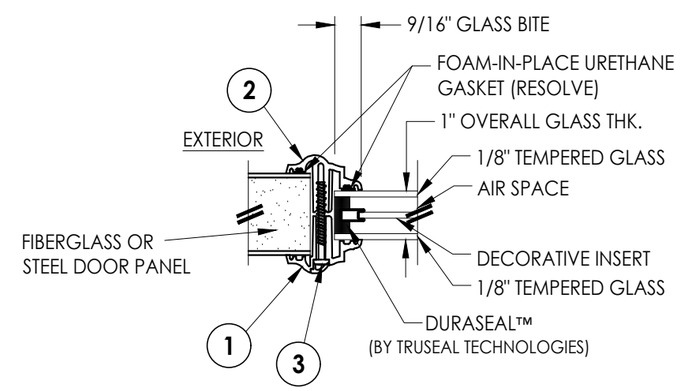

G2 **GLAZING DETAIL**
EVOLVE FRAME (1" DECOSEAL INSULATED GLASS)
RESOLVE GASKET

Documents Prepared By:
Lyndon F. Schmidt
P.E. No. 43409
RW BUILDING CONSULTANTS, INC.
P.O. Box 230, Valrico, FL 33595
Phone No.: 813.659.9197
FBPE Registry No. 9813

PRODUCT: EVOLVE LITE FRAME SYSTEM

PART OR ASSEMBLY: FRAME & GLAZING DETAILS & BILL OF MATERIALS

NO.	DATE	REVISIONS	BY
6	7/01/23	UPDATE TO 8TH ED. (2023) FBC	LFS
5	8/05/20	UPDATE TO 7TH ED. (2020) FBC	DAC
4	4/04/19	UPDATE D.P. FOR NEW TESTING	LFS
3	10/03/18	ADD DOOR PANELS & GLAZING DET.	LFS
2	9/26/17	UPDATE TO 6TH ED. (2017) FBC	JK
1	3/28/15	UPDATE TO 5TH ED. (2014) FBC	JK

DATE: 4/15/13
SCALE: N.T.S.
DWG. BY: JK
CHK. BY: LFS
DRAWING NO.: FL-15260.8
SHEET 2 OF 4

© 2013 R.W. BUILDING CONSULTANTS INC.

Z:\2023 FBC Drawings\ODL, Inc\FL-15260 R11\FL-15260.8.dwg

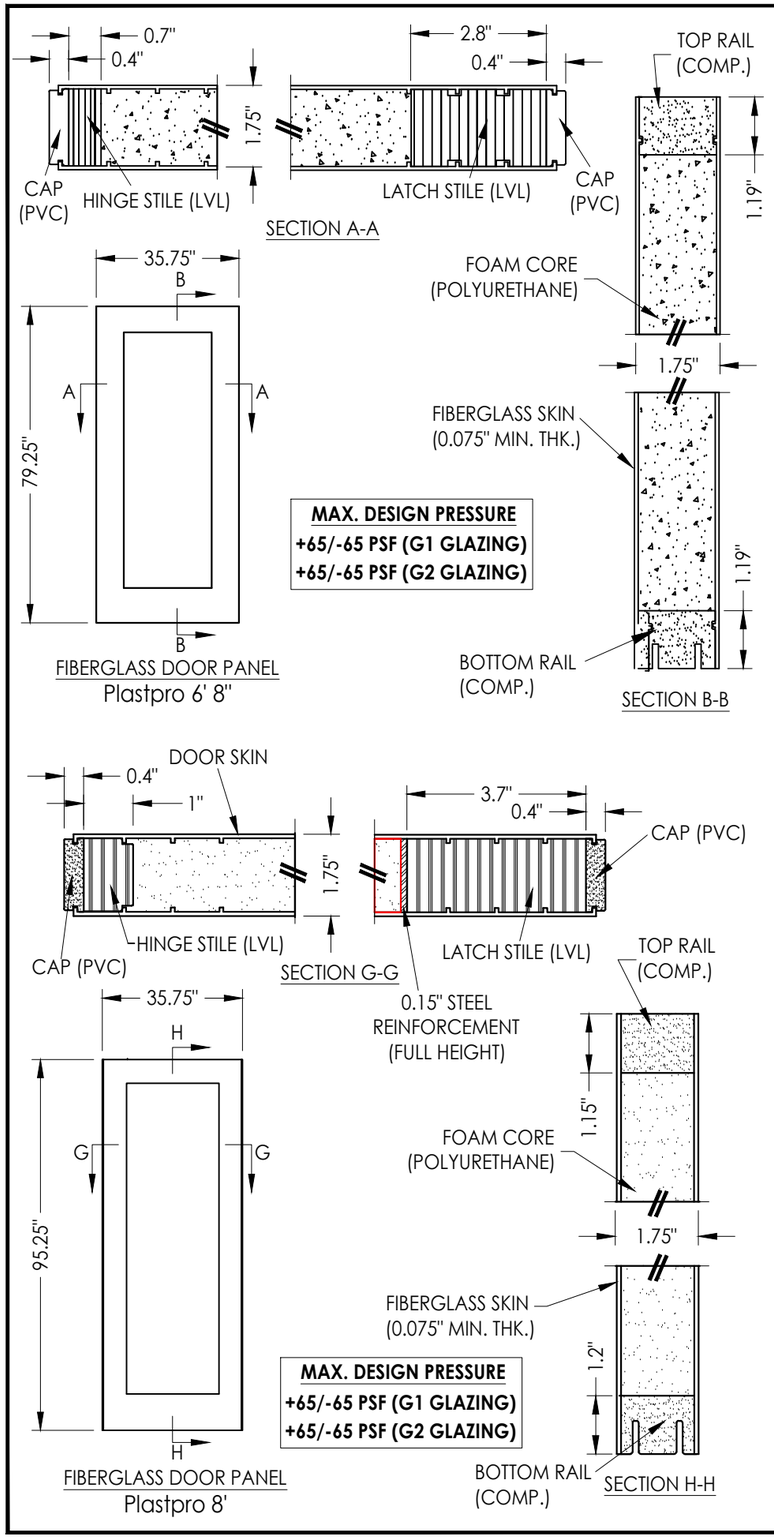

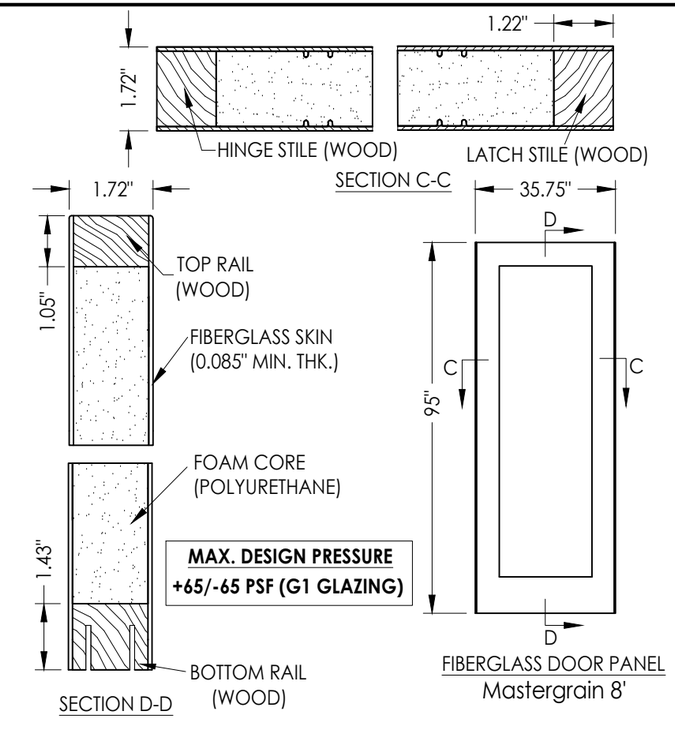

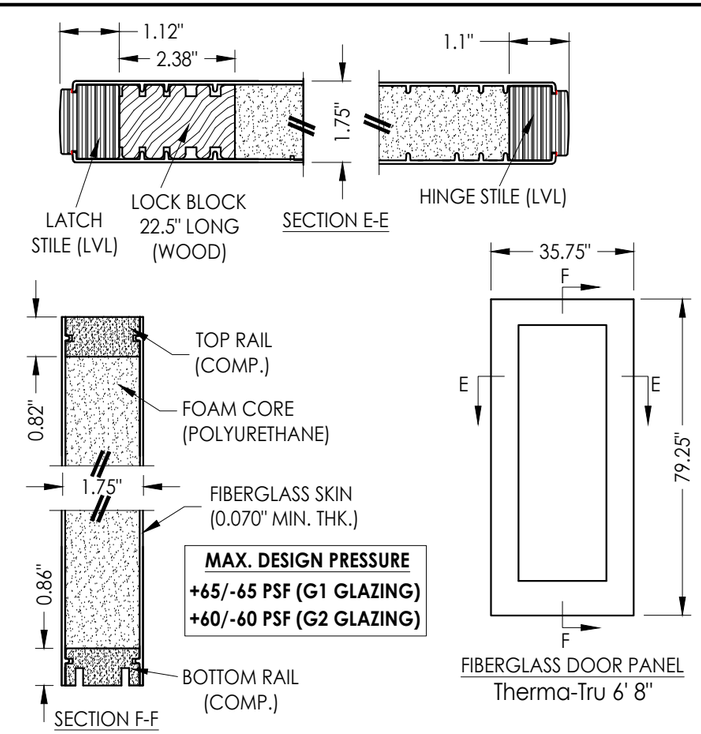

Documents Prepared By:
Lyndon F. Schmidt
P.E. No. 43409

RW BUILDING CONSULTANTS, INC.
P.O. Box 230, Valrico, FL 33595
Phone No.: 813.659.9197
FBPE Registry No. 9813

PRODUCT: *EVOLVE LITE FRAME SYSTEM*

PART OR ASSEMBLY: *FIBERGLASS DOOR PANELS*

NO.	DATE	REVISIONS	BY
6	7/01/23	UPDATE TO 8TH ED. (2023) FBC	LFS
5	8/05/20	UPDATE TO 7TH ED. (2020) FBC	DAC
4	4/04/19	UPDATE D.P. FOR NEW TESTING	LFS
3	10/03/18	ADD DOOR PANELS & GLAZING DET.	LFS
2	9/26/17	UPDATE TO 6TH ED. (2017) FBC	JK
1	3/28/15	UPDATE TO 5TH ED. (2014) FBC	JK

DATE: 4/15/13
SCALE: N.T.S.
DWG. BY: JK
CHK. BY: LFS
DRAWING NO.: FL-15260.8
SHEET 3 OF 4

© 2013 R.W. BUILDING CONSULTANTS INC.

Z:\2023 FBC Drawings\ODL, Inc\FL-15260 R11\FL-15260.8.dwg

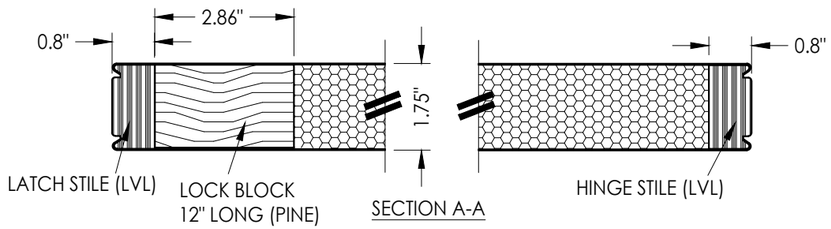

SECTION A-A

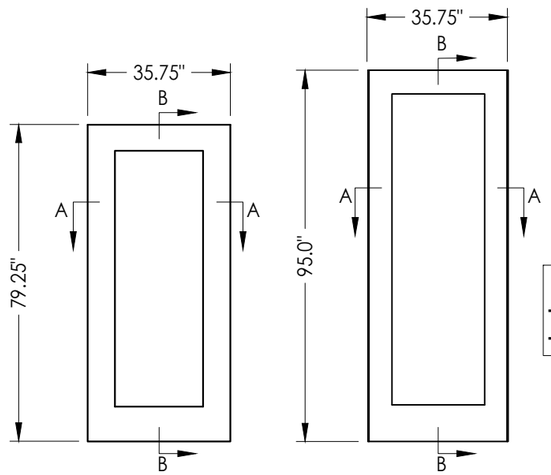

STEEL DOOR PANEL
Masonite 6' 8"

STEEL DOOR PANEL
Masonite 8'

MAX. DESIGN PRESSURE
+60/-60 PSF (G1 GLAZING)
+60/-60 PSF (G2 GLAZING)

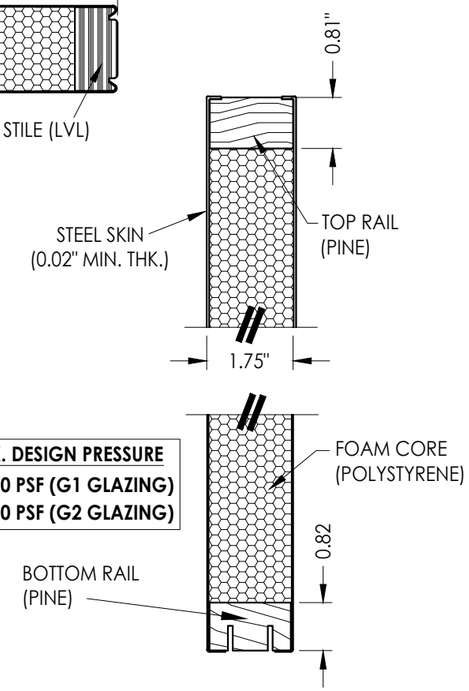

SECTION B-B

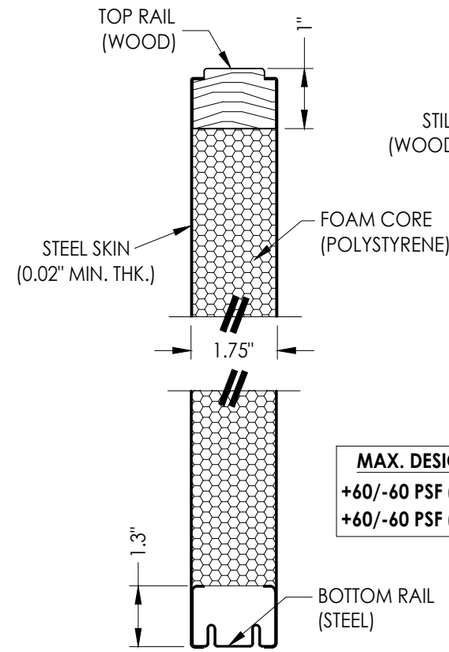

SECTION D-D

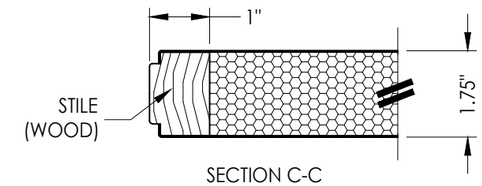

SECTION C-C

MAX. DESIGN PRESSURE
+60/-60 PSF (G1 GLAZING)
+60/-60 PSF (G2 GLAZING)

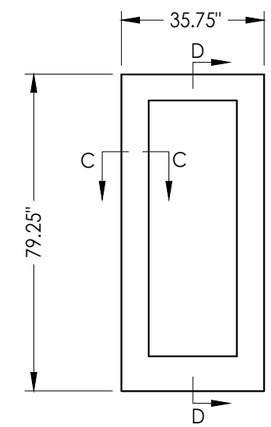

STEEL DOOR PANEL
JELD-WEN 6' 8"

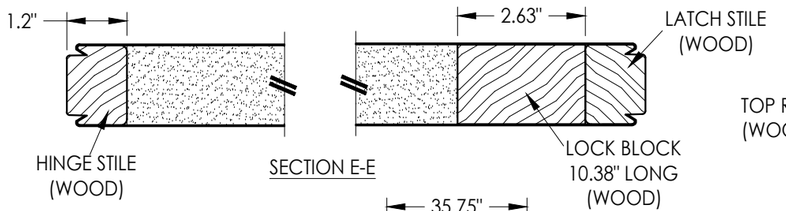

SECTION E-E

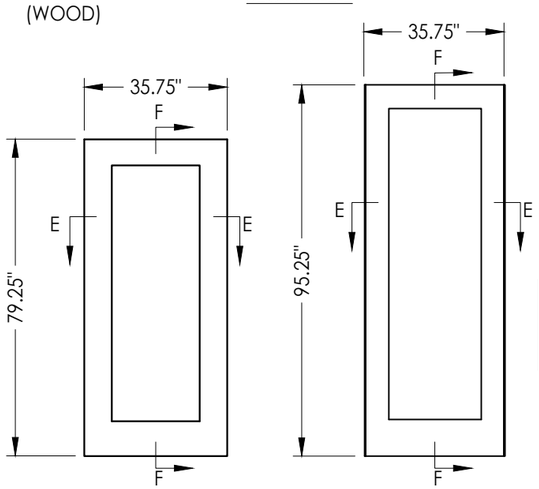

STEEL DOOR PANEL
Therma-Tru 6' 8"

STEEL DOOR PANEL
Therma-Tru 8'

MAX. DESIGN PRESSURE
+60/-60 PSF (G1 GLAZING)
+60/-60 PSF (G2 GLAZING)

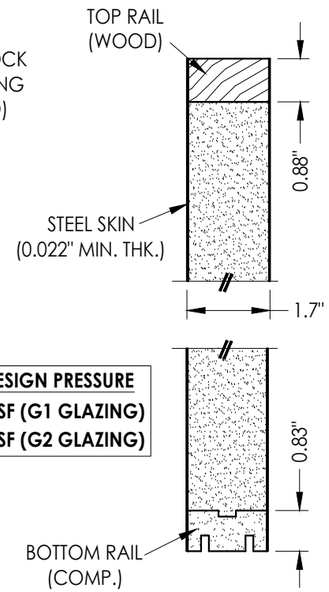

SECTION F-F

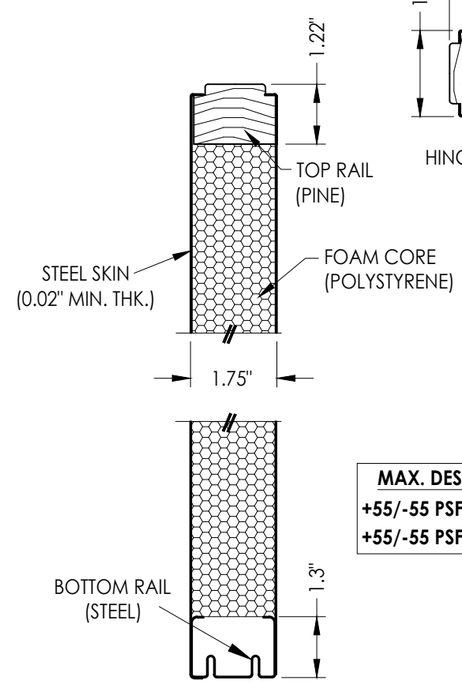

SECTION H-H

MAX. DESIGN PRESSURE
+55/-55 PSF (G1 GLAZING)
+55/-55 PSF (G2 GLAZING)

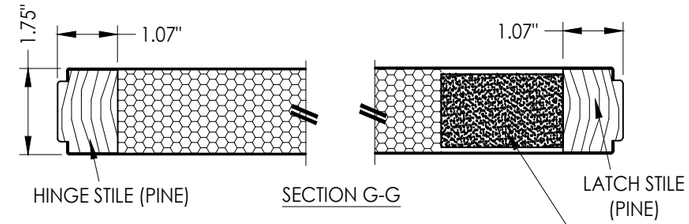

SECTION G-G

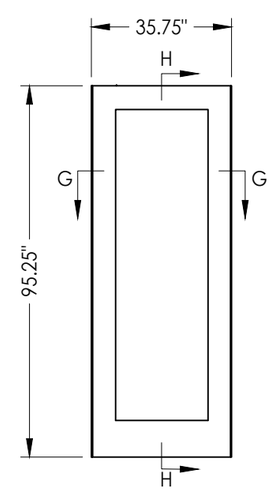

STEEL DOOR PANEL
JELD-WEN 8'

Documents Prepared By:
Lyndon F. Schmidt
P.E. No. 43409

RW BUILDING CONSULTANTS, INC.
P.O. Box 230, Valrico, FL 33595
Phone No.: 813.659.9197
FBPE Registry No. 9813

PRODUCT: EVOLVE LITE FRAME SYSTEM

PART OR ASSEMBLY: STEEL DOOR PANELS

NO.	DATE	REVISIONS	BY
6	7/01/23	UPDATE TO 8TH ED. (2023) FBC	LFS
5	8/05/20	UPDATE TO 7TH ED. (2020) FBC	DAC
4	4/04/19	UPDATE D.P. FOR NEW TESTING	LFS
3	10/03/18	ADD DOOR PANELS & GLAZING DET.	LFS
2	9/26/17	UPDATE TO 6TH ED. (2017) FBC	JK
1	3/28/15	UPDATE TO 5TH ED. (2014) FBC	JK

DATE: 4/15/13
SCALE: N.T.S.
DWG. BY: JK
CHK. BY: LFS
DRAWING NO.: FL-15260.8
SHEET 4 OF 4

© 2013 R.W. BUILDING CONSULTANTS INC.

Z:\2023 FBC Drawings\ODL, Inc\FL-15260 R11\FL-15260.8.dwg